NEW

Series 1080/G

- Compact design
- Use in extreme production environments
- For use in function test or IN-LINE-TEST
- Test of high currents

Mechanical Data

Center	7.60 mm/300 mil
Temperature Range	-40 °C - +250 °C
Full Travel	5.50 mm
Working Travel	4.40 mm
Spring Force at Working Travel	see High-Temperature Applications

Electrical Data

Max. Current Rating	100.0 A
Typical Continuity Resistance	<= 5 mOhm

Materials

Barrel	Brass, silver plated
Spring	Stainless Steel, gold plated
Plunger	CuBe, gold plated/Silver Cap
Receptacle	Brass, silver plated

Recommended Diameter of Drill

HP 2361.1 (Trolitax)	6.40...6.50 mm
HGW 2372	6.50 mm

High-Temperature Applications

Temperature Range	-40 °C - +250 °C
Pre-Loaded Spring Force	3.00/ 5.00 N
Spring Force at Working Travel (Order Index E)	7.00/ 15.00 N

Available Screw Tools

Article Designation	max. Tip Diameter
Standard Socket - Wrench 6.0 mm	6.0

Tip style - Diameter - Plating

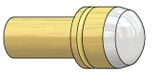

CX	DNX
6.00C Au	6.00C Ag

1080/G

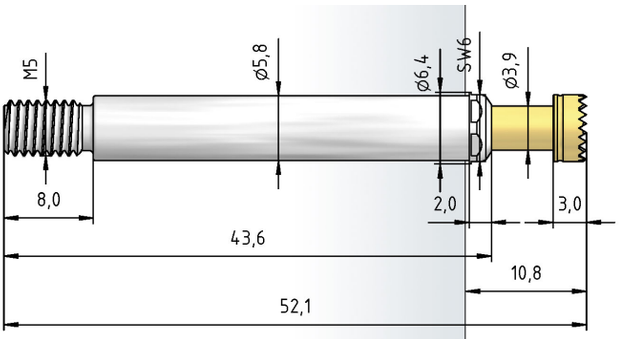

H 1080/GR-L

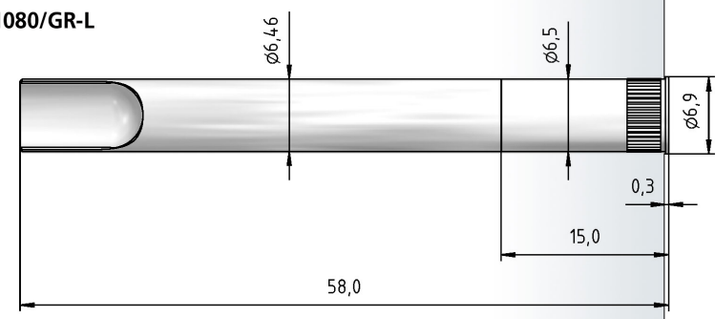

H 1080/GR-M5

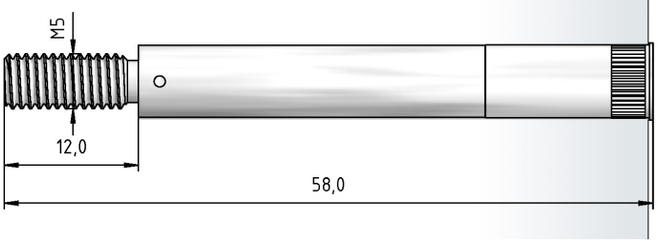

How to Order

1080/	G	-	CX	-	7.0 N	E	-	Au	-	6.0	C
1	2		3		4	5		6		7	8

1. Series 2. Threaded Design 3. Tip Style
4. Spring Force 5. High Temperature 6. Tip Plating
7. Tip Diameter 8. Tip Material (only for CuBe)