Wire Guard | Spacing 3.5 mm

AK550/..DS-3.5-V-GREY

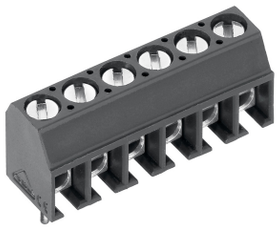

PTR
A Phoenix Mecano Brand

Technical Data

Wire sizes	
Solid min	0.08 mm²
Solid max	1.5 mm²
Stranded (flexible) min	0.08mm²
Stranded (flexible) max	1.0 mm²
Stranded with Ferrule min	0.14 mm²
Stranded with Ferrule max	0.5 mm²
Dimensions	
Stripped Length	5.5 mm
PCB Hole Diameter	1.2 mm
Materials	
Clamp	Brass
Wire Guard	Stainless Steel
Screw	Steel

Insulating Material	
Material	PA 6.6
Flammability Class	UL 94 V-0
Temperatures	
Operating Temperature (without mech. load)	-40 °C - 105 °C
Store Temperature	-40 °C - 105 °C
Wave Soldering Process	
Soldering Temperature, recommended	260 °C
Peak Soldering Time, recommended	3-4 s
Reflow Process	
Soldering Temperature, recommended	-
Peak Soldering Time, recommended	-

Colours

- GREY, RAL 7016
- PEBBLE GREY, RAL 7032
- GREEN, RAL 6018
- LIGHT GREEN, similar RAL 6018

Colours according to RAL, there may be variations on colour due to production conditions. Special colours on request.

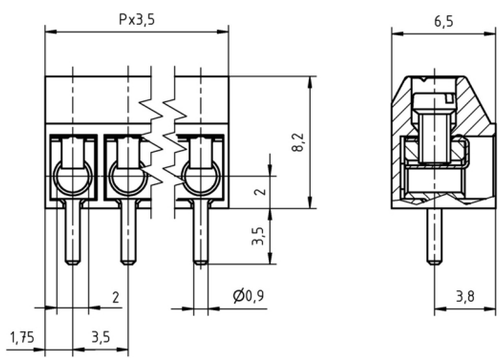

Order Data (Spacing 3.5 mm)

Poles	Width (mm)	Article Designation	Article Number	PU
2	7.00	AK550/2DS-3.5-V-GREY	50550020121 G	250
3	10.50	AK550/3DS-3.5-V-GREY	50550030121 G	250
4	14.00	AK550/4DS-3.5-V-GREY	50550040121 G	250
5	17.50	AK550/5DS-3.5-V-GREY	50550050121 G	250
6	21.00	AK550/6DS-3.5-V-GREY	50550060121 G	250
7	24.50	AK550/7DS-3.5-V-GREY	50550070121 G	250
8	28.00	AK550/8DS-3.5-V-GREY	50550080121 E	100
9	31.50	AK550/9DS-3.5-V-GREY	50550090121 E	100
10	35.00	AK550/10DS-3.5-V-GREY	50550100121 D	50
11	38.50	AK550/11DS-3.5-V-GREY	50550110121 D	50
12	42.00	AK550/12DS-3.5-V-GREY	50550120121 D	50
13	45.50	AK550/13DS-3.5-V-GREY	50550130121 D	50
14	49.00	AK550/14DS-3.5-V-GREY	50550140121 D	50
15	52.50	AK550/15DS-3.5-V-GREY	50550150121 D	50
16	56.00	AK550/16DS-3.5-V-GREY	50550160121 D	50

Accessoires

Figure	Designation	Article Number
	Bridge, 2-pole, insulated, BRI/2-7.0/7.62-L7.5-LIGHT GREY	Order Data: 50000000018
	Bridge, 2-pole, angled, BR/2-3.5/3.81-H-L7.5	Order Data: 50000000029
	Bridge, 2-pole, BR/2-3.5/3.81-L7.5	Order Data: 50000000015
	Bridge, 3-pole, BR/3-3.5/3.81-L7.5	Order Data: 50000000016

Ratings

		c UL us		VDE	
UseGroup	B	C	D		
Rated Voltage	125 V	-	-	130 V	
Rated Current	6 A	-	-	13.5 A	
Rated Wire Size				min	max
- solid	AWG 28-16	-	-	0.5 mm²	1.0 mm²
- stranded	AWG 28-16	-	-	0.5 mm²	1.0 mm²
Torque	0.25 Nm	-	-	0.20 Nm	
Screw Size	M2	-	-	M2	
Test Voltage	1.25 kV	-	-	1.25 kV	

PTR HARTMANN GmbH • Gewerbehof 38 • 59368 Werne / Germany
Telefon: +49 (0)2389/7988-0 • E-Mail: info@ptr-hartmann.com